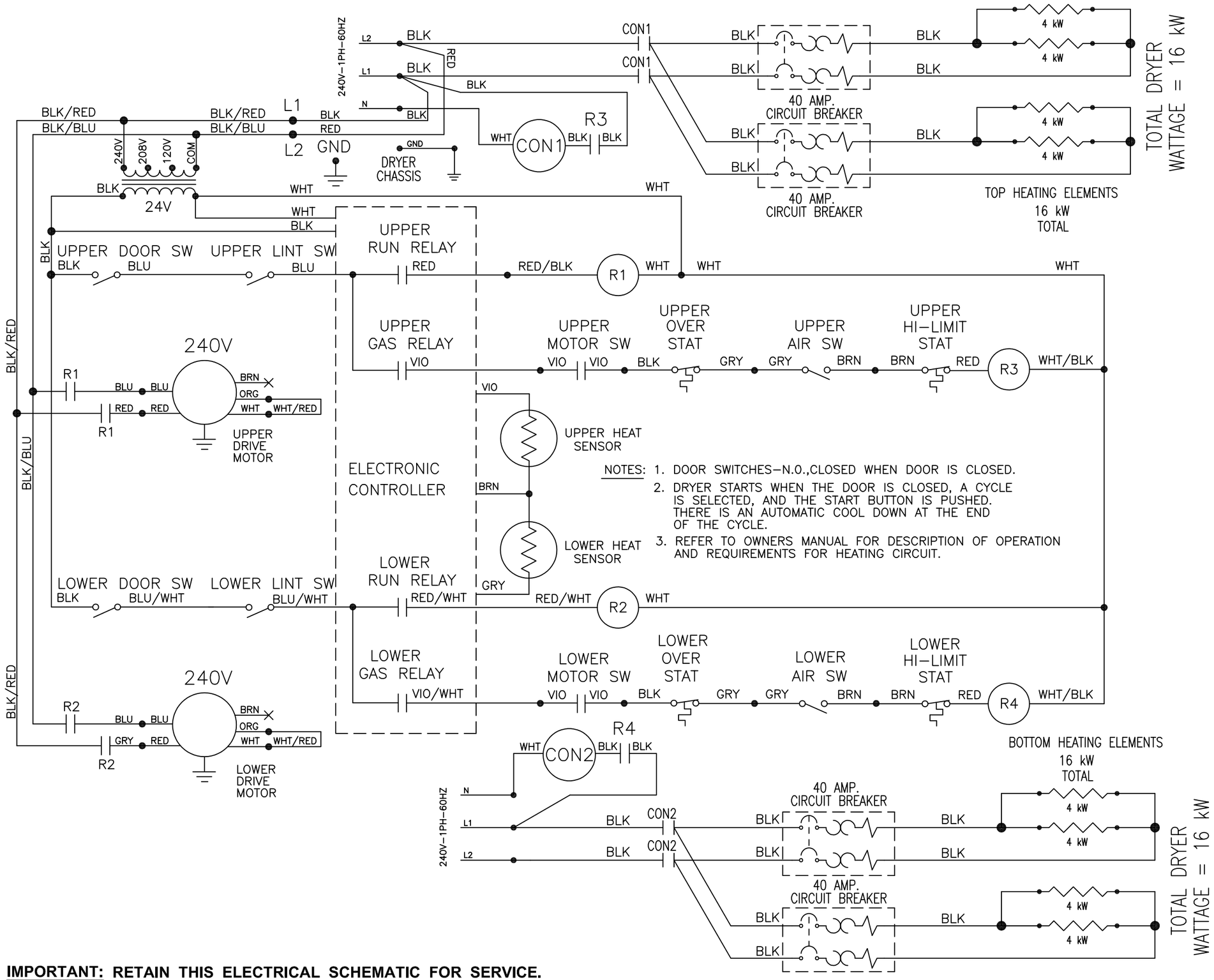

NOTES:
1. DOOR SWITCHES–N.O.,CLOSED WHEN DOOR IS CLOSED.
2. DRYER STARTS WHEN THE DOOR IS CLOSED, A CYCLE IS SELECTED, AND THE START BUTTON IS PUSHED. THERE IS AN AUTOMATIC COOL DOWN AT THE END OF THE CYCLE.
3. REFER TO OWNERS MANUAL FOR DESCRIPTION OF OPERATION AND REQUIREMENTS FOR HEATING CIRCUIT.

IMPORTANT: RETAIN THIS ELECTRICAL SCHEMATIC FOR SERVICE.

9506-861-001A SCHEMATIC DN20X2E_-87_B_X-_____-__X

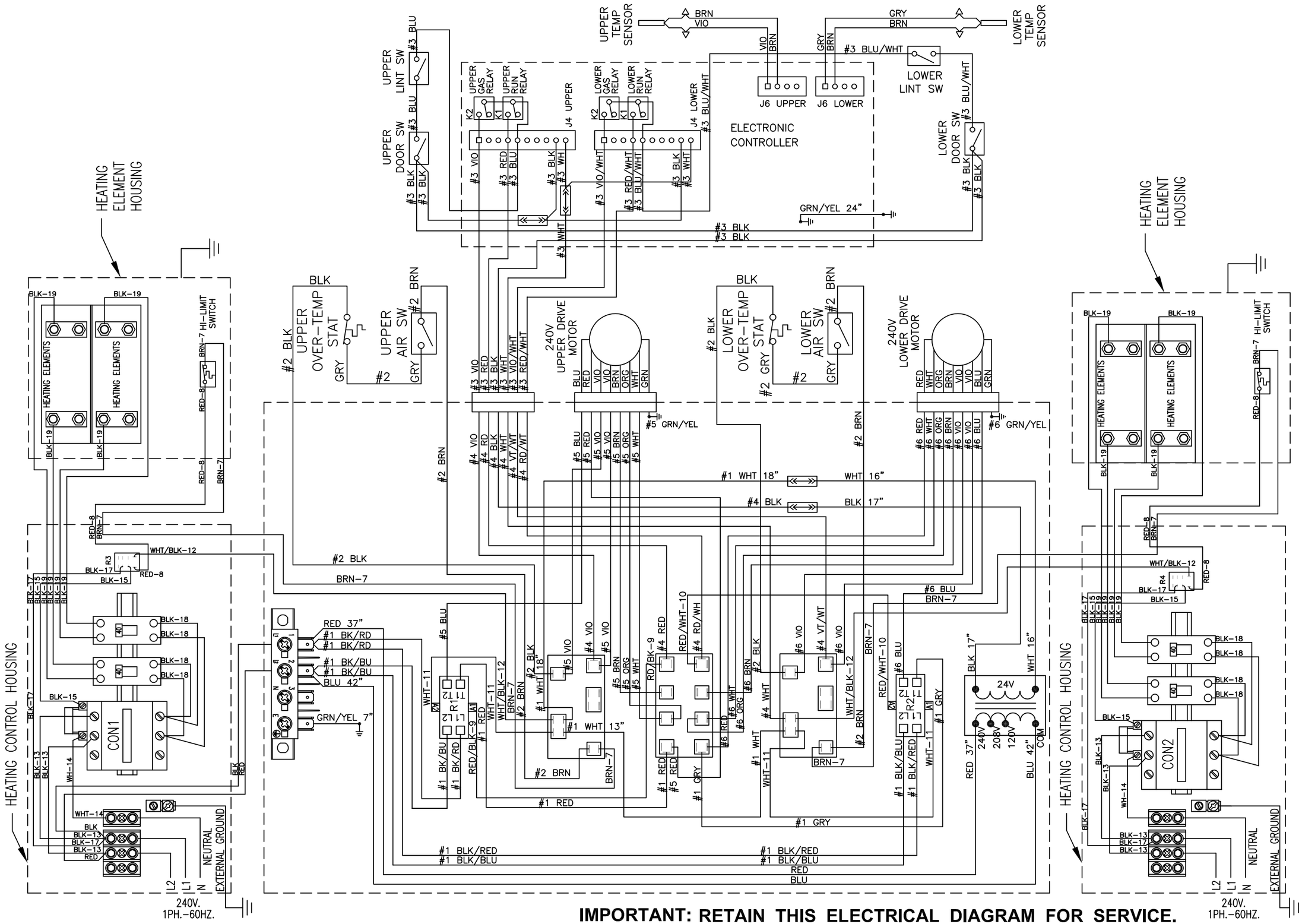

IMPORTANT: RETAIN THIS ELECTRICAL DIAGRAM FOR SERVICE.

9506-861-001A WIRING DIAGRAM DN20X2E_-87_B_X-_____-__X