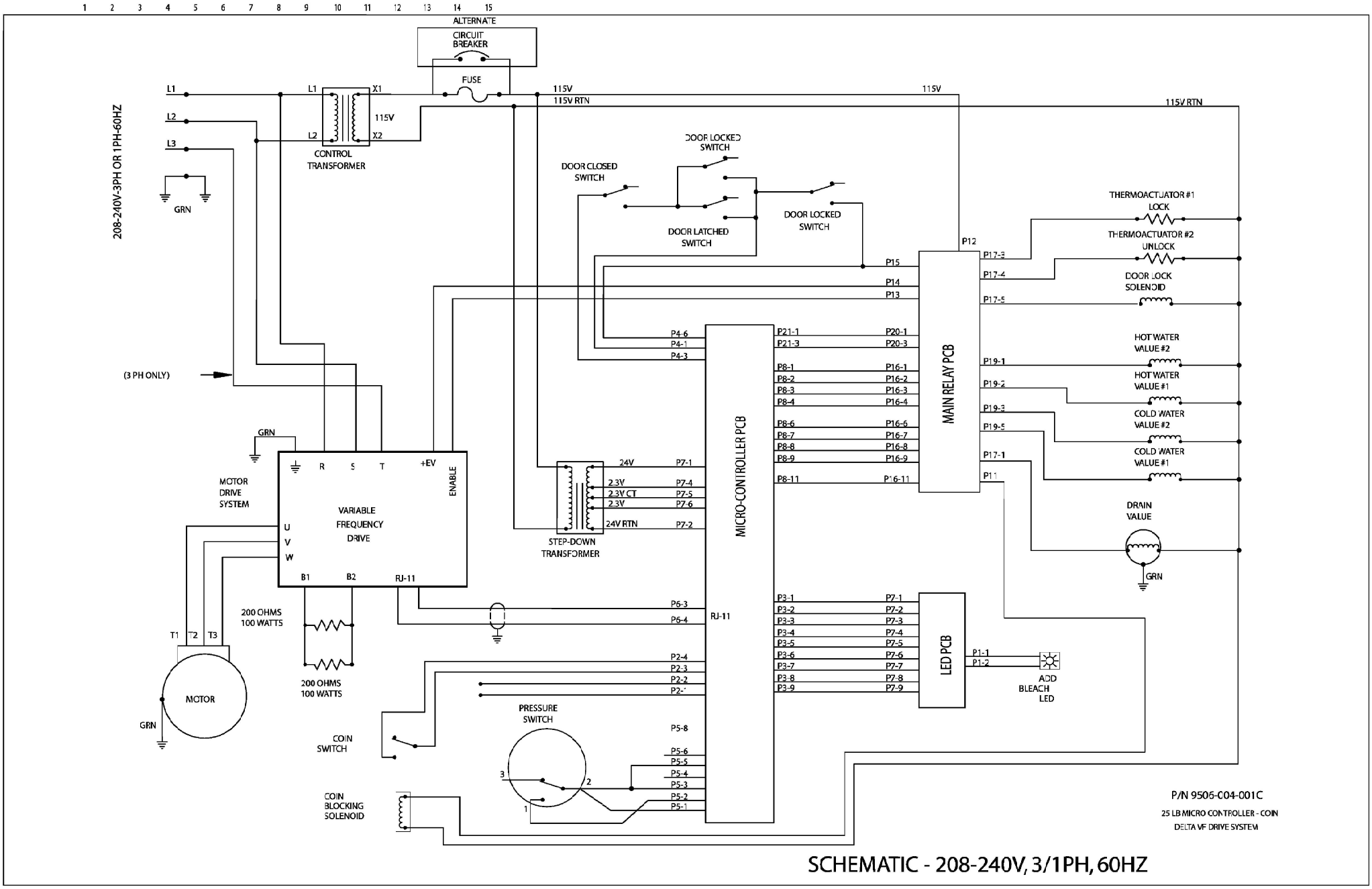

SCHEMATIC - 208-240V, 3/1PH, 60HZ

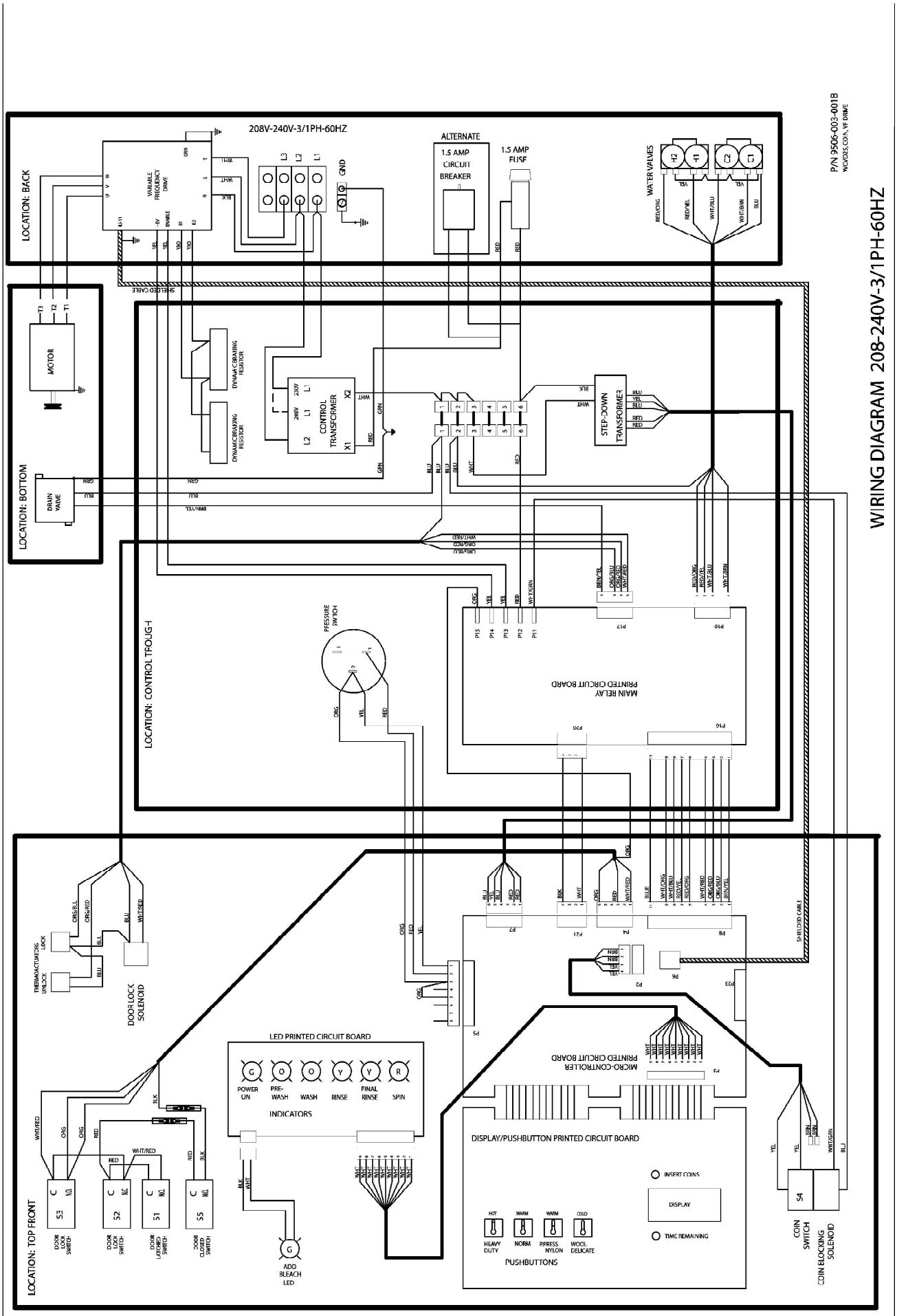
WIRING DIAGRAM 208-240V-3/1PH-60HZ
P/N 9506-003-001B
WCO/025, CON, VF DRWE
LOCATION: BACK
208V-240V-3/1PH-60HZ
VARIABLE FREQUENCY DRIVE
ALTERNATE
1.5 AMP CIRCUIT BREAKER
1.5 AMP FUSE
WATER VALVES
GND
LOCATION: BOTTOM
MOTOR
DRAIN VALVE
DYNAMICBRAKING RESISTOR
CONTROL TRANSFORMER
STEP-DOWN TRANSFORMER
LOCATION: CONTROL TROUGH
PRESSURE SWITCH
MAIN RELAY PRINTED CIRCUIT BOARD
LOCATION: TOP FRONT
THERMOACTUATORS
DOOR LOCK SOLENOID
LED PRINTED CIRCUIT BOARD
POWER ON
PRE-WASH
WASH
RINSE
FINAL RINSE
SPIN
INDICATORS
MICRO-CONTROLLER PRINTED CIRCUIT BOARD
DISPLAY/PUSHBUTTON PRINTED CIRCUIT BOARD
INSERT COINS
DISPLAY
TIME REMAINING
HOT
WARM
WARM
COLD
HEAVY DUTY
NORM
PRESS NYLON
WOOL DELICATE
PUSHBUTTONS
DOOR LOCK SWITCH
DOOR LOCK SWITCH
DOOR LATCHED SWITCH
DOOR CLOSED SWITCH
ADD BLEACH LED
COIN SWITCH
COIN BLOCKING SOLENOID
SHIELDED CABLE