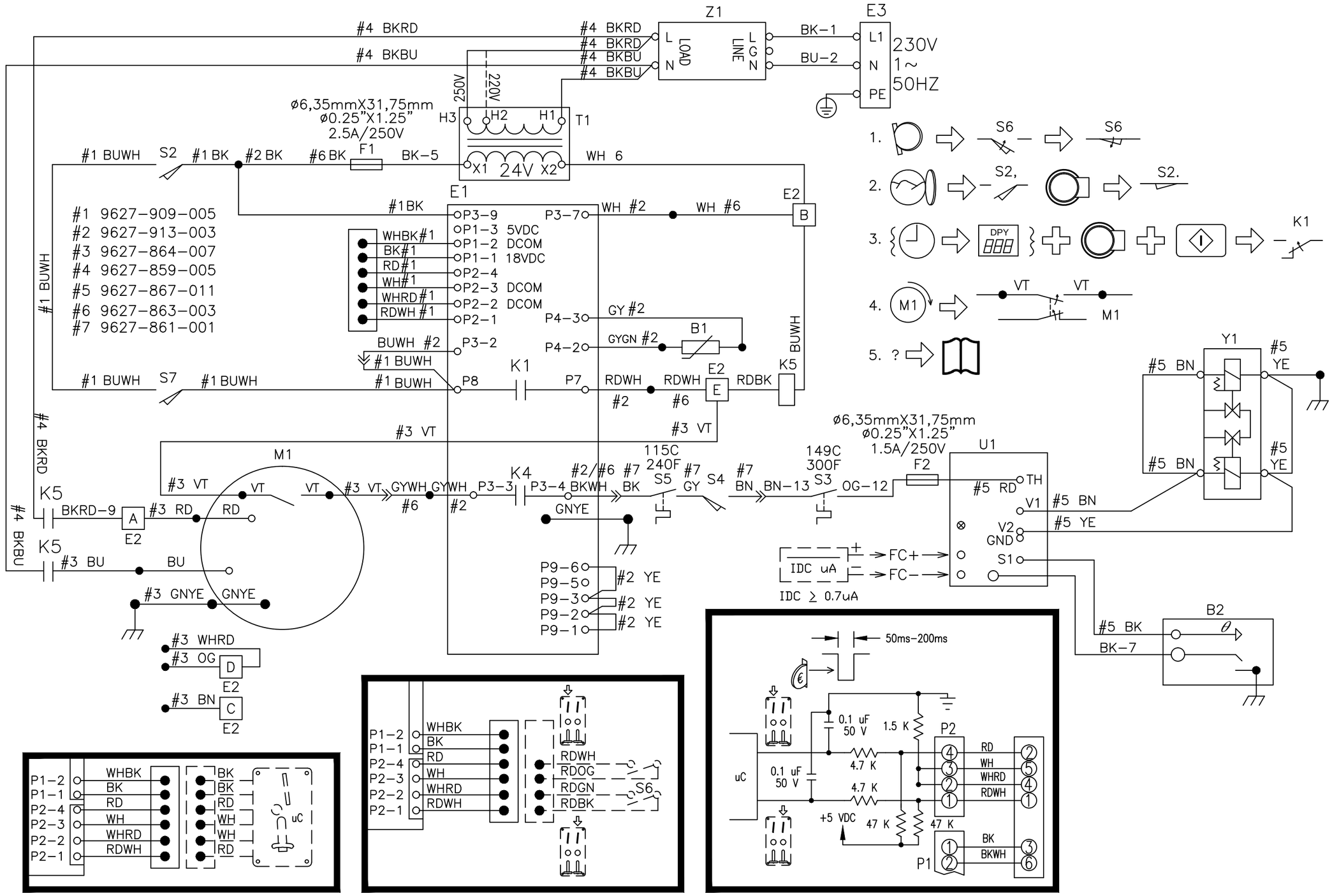

9506-842-001PR

SCHEMATIC

DCS030N_-59CC_X-_____-___

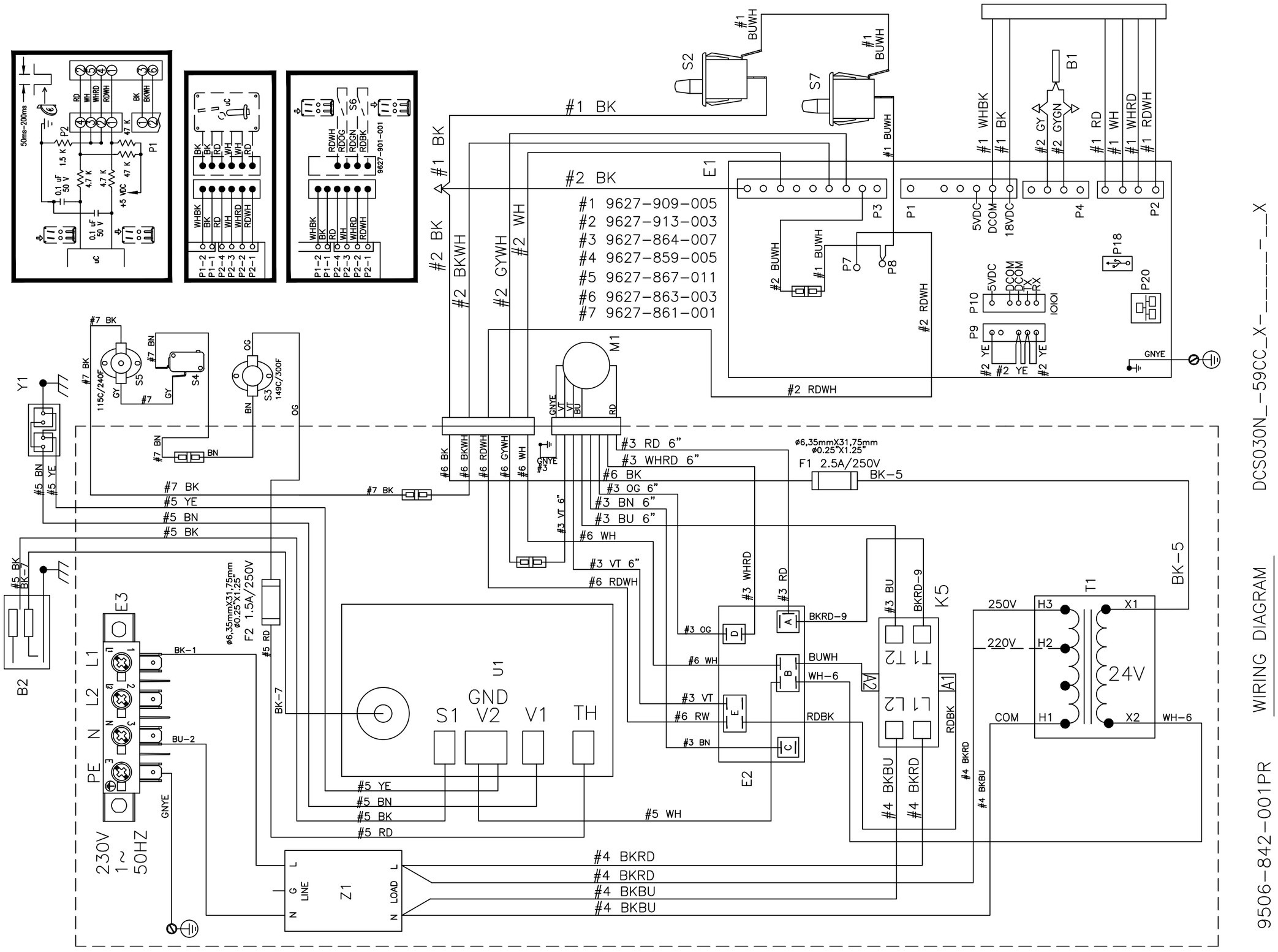
#1 9627-909-005
#2 9627-913-003
#3 9627-864-007
#4 9627-859-005
#5 9627-867-011
#6 9627-863-003
#7 9627-861-001
WIRING DIAGRAM
9506-842-001PR
DCS030N_-59CC_X-_____-__X
230V 1~ 50HZ
24V
250V
220V
COM
F1 2.5A/250V
F2 1.5A/250V
ø6,35mmX31,75mm ø0.25"X1.25"
K5
T1
Z1
U1
M1
S2
S7
B1
B2
Y1
E1
E2
E3
S3 149C/300F
S4
S5 115C/240F
S6 9627-901-001
P1
P2
P3
P4
P7
P8
P9
P10
P18
P20
GND
S1
V2
V1
TH
LINE
LOAD
5VDC
DCOM
18VDC
TX
RX
IOIOI
GNYE