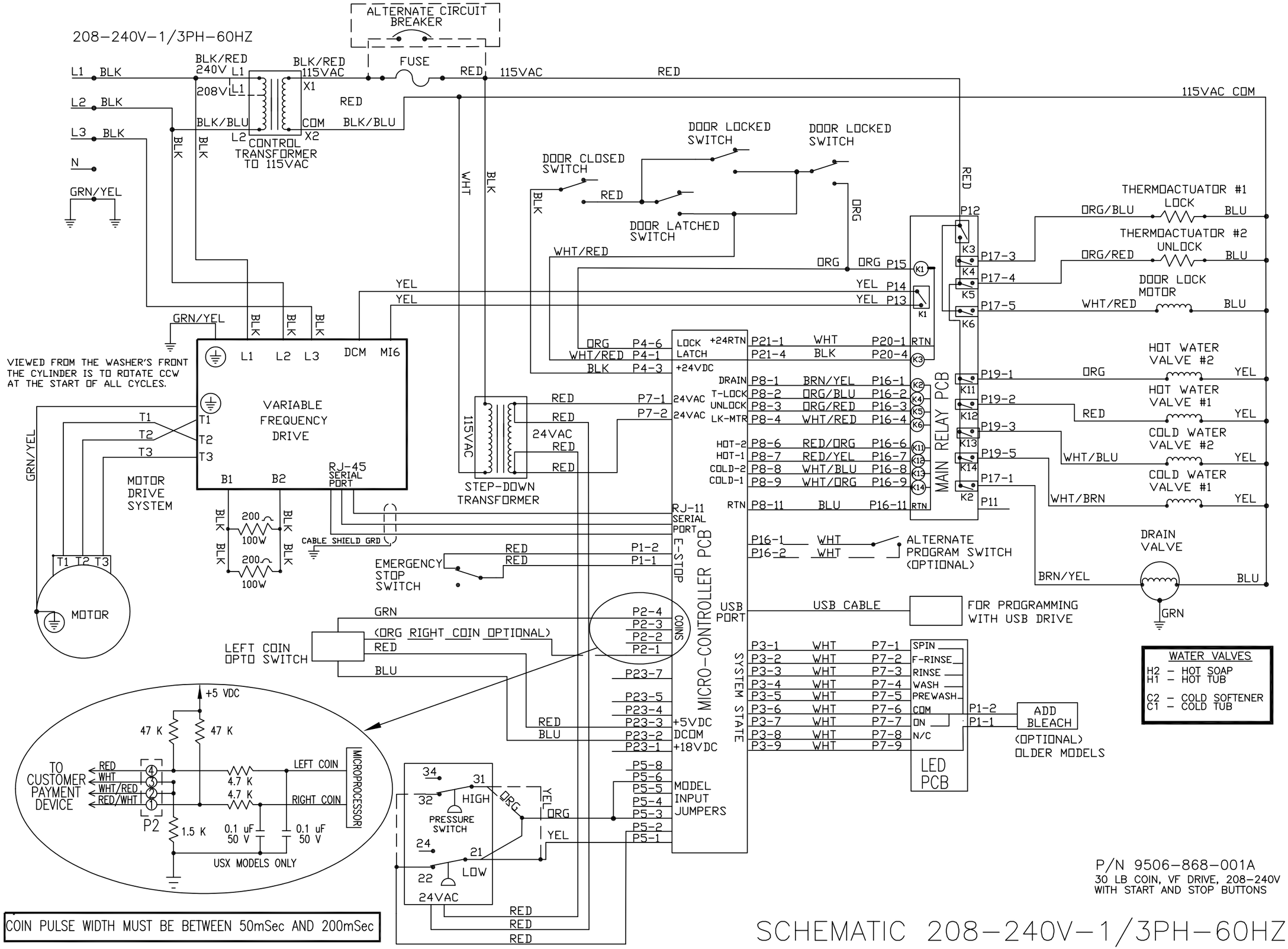
208-240V-1/3PH-60HZ
ALTERNATE CIRCUIT BREAKER
FUSE
L1 BLK
L2 BLK
L3 BLK
N
GRN/YEL
BLK/RED 240V
BLK/RED 115VAC
208V
BLK/BLU
CONTROL TRANSFORMER TO 115VAC
115VAC
115VAC COM
RED
DOOR LOCKED SWITCH
DOOR LOCKED SWITCH
DOOR CLOSED SWITCH
DOOR LATCHED SWITCH
WHT/RED
YEL
ORG
THERMOACTUATOR #1 LOCK
THERMOACTUATOR #2 UNLOCK
DOOR LOCK MOTOR
HOT WATER VALVE #2
HOT WATER VALVE #1
COLD WATER VALVE #2
COLD WATER VALVE #1
DRAIN VALVE
ORG/BLU
ORG/RED
WHT/RED
WHT/BLU
WHT/BRN
BRN/YEL
BLU
GRN
VIEWED FROM THE WASHER'S FRONT THE CYLINDER IS TO ROTATE CCW AT THE START OF ALL CYCLES.
VARIABLE FREQUENCY DRIVE
L1 L2 L3 DCM MI6
T1 T2 T3
B1 B2
RJ-45 SERIAL PORT
MOTOR DRIVE SYSTEM
MOTOR
200 100W
CABLE SHIELD GRD
STEP-DOWN TRANSFORMER
24VAC
EMERGENCY STOP SWITCH
LEFT COIN OPTO SWITCH
(ORG RIGHT COIN OPTIONAL)
MAIN RELAY PCB
MICRO-CONTROLLER PCB
LOCK LATCH
+24RTN
+24VDC
DRAIN
T-LOCK
UNLOCK
LK-MTR
HOT-2
HOT-1
COLD-2
COLD-1
RTN
RJ-11 SERIAL PORT
E-STOP
COINS
USB PORT
USB CABLE
FOR PROGRAMMING WITH USB DRIVE
SYSTEM STATE
SPIN
F-RINSE
RINSE
WASH
PREWASH
COM
ON
N/C
LED PCB
ADD BLEACH
(OPTIONAL) OLDER MODELS
ALTERNATE PROGRAM SWITCH (OPTIONAL)
+5VDC
DCOM
+18VDC
MODEL INPUT JUMPERS
PRESSURE SWITCH
HIGH
LOW
+5 VDC
47 K
4.7 K
1.5 K
0.1 uF 50 V
TO CUSTOMER PAYMENT DEVICE
LEFT COIN
RIGHT COIN
MICROPROCESSOR
USX MODELS ONLY
WATER VALVES
H2 - HOT SOAP
H1 - HOT TUB
C2 - COLD SOFTENER
C1 - COLD TUB
P/N 9506-868-001A
30 LB COIN, VF DRIVE, 208-240V
WITH START AND STOP BUTTONS
COIN PULSE WIDTH MUST BE BETWEEN 50mSec AND 200mSec
SCHEMATIC 208-240V-1/3PH-60HZ

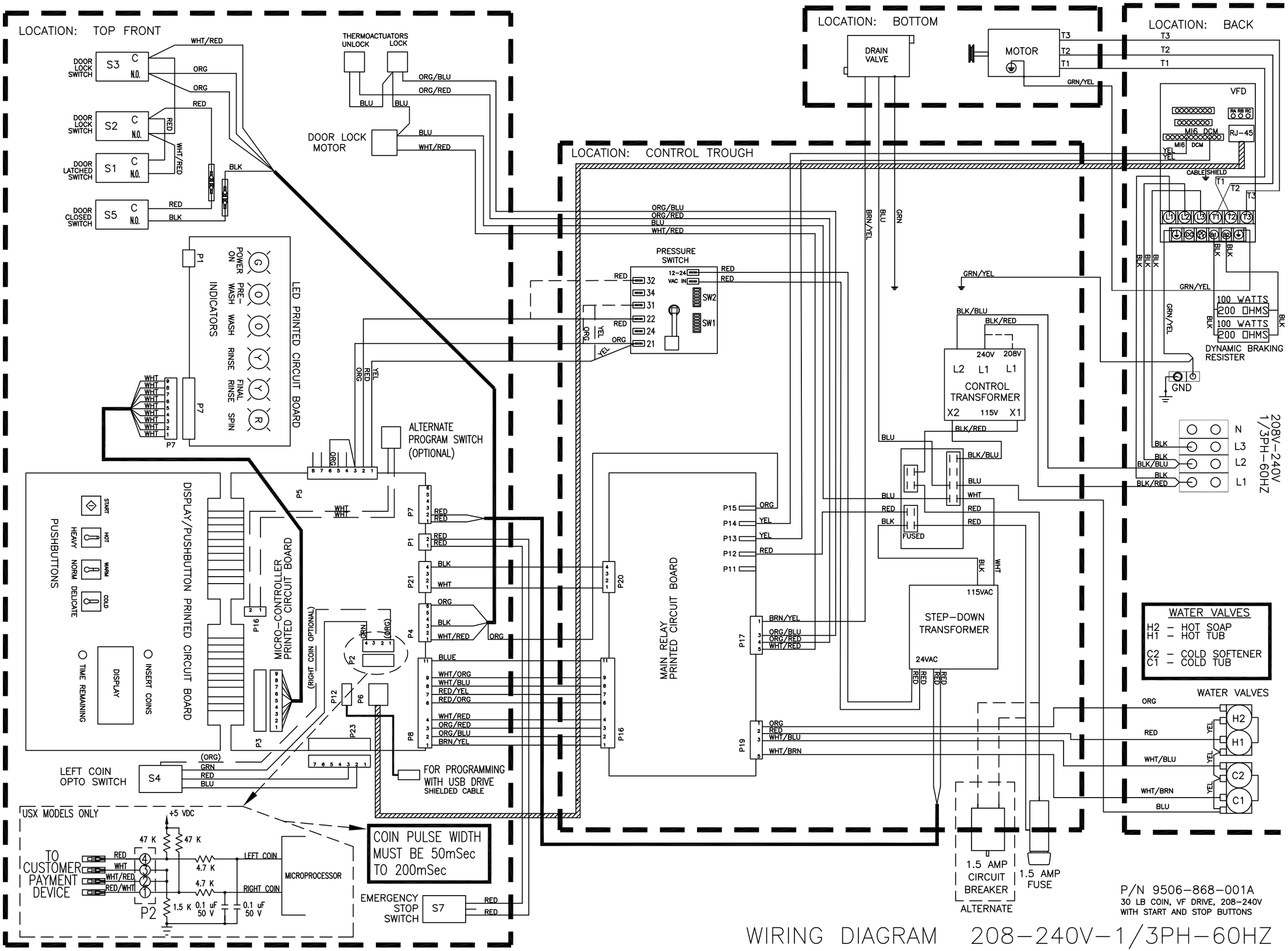


WIRING DIAGRAM 208-240V-1/3PH-60HZ