NOTES:

1. COIN SWITCH/ADD TIME SWITCH–N.O.,CLOSED WHEN COIN INSERTED
2. DOOR SWITCHES–N.O.,CLOSED WHEN DOOR IS CLOSED.
3. MOTOR RUN RELAY CONTACT WILL CLOSE WHEN THE COIN COUNT IS SATISFIED,THE DOOR CLOSED AND THE START BUTTON PRESSED.
4. REFER TO OWNERS MANUAL FOR DESCRIPTION OF OPERATION AND REQUIREMENTS FOR HEATING CIRCUIT.

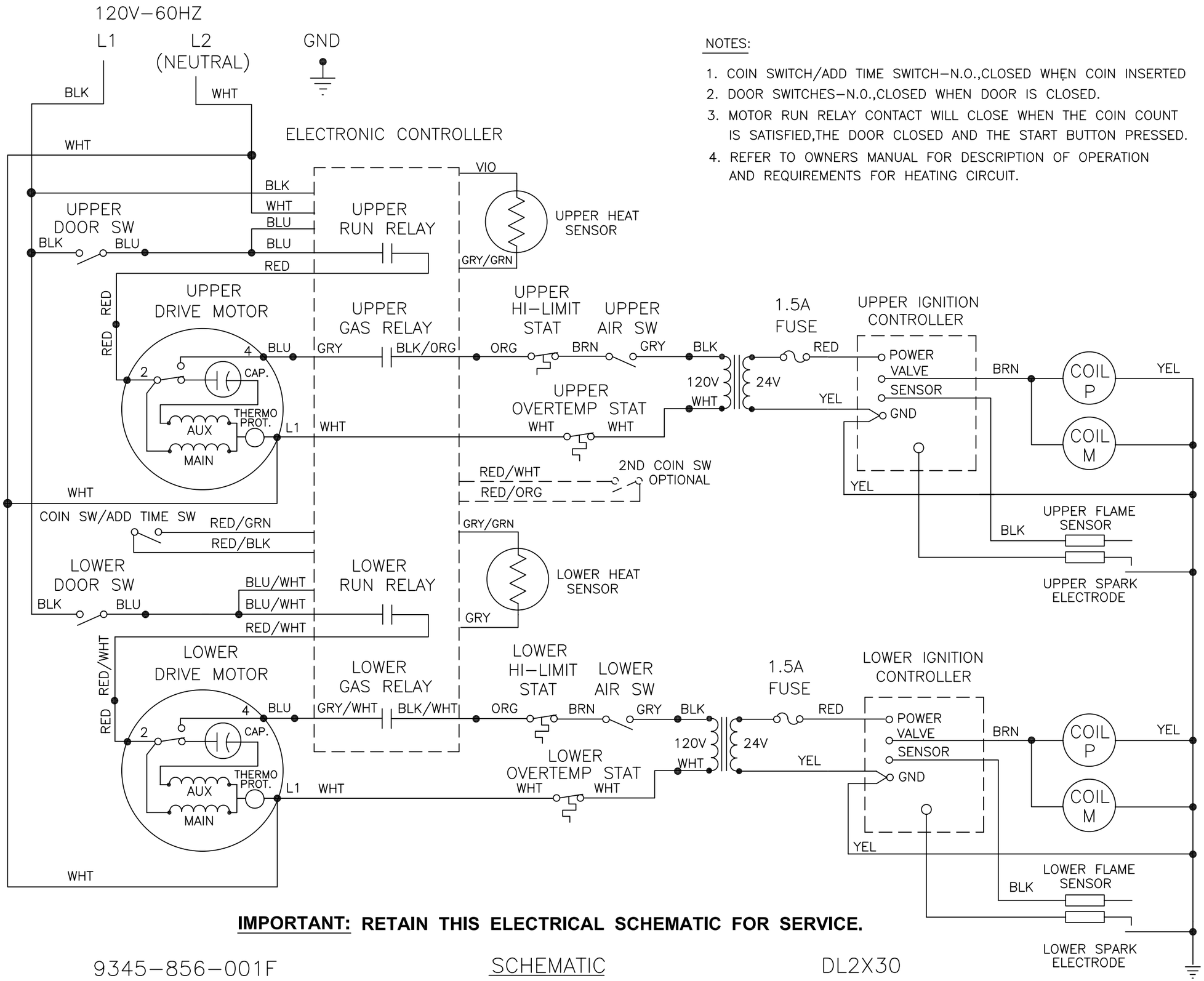

IMPORTANT: RETAIN THIS ELECTRICAL SCHEMATIC FOR SERVICE.

9345–856–001F SCHEMATIC DL2X30