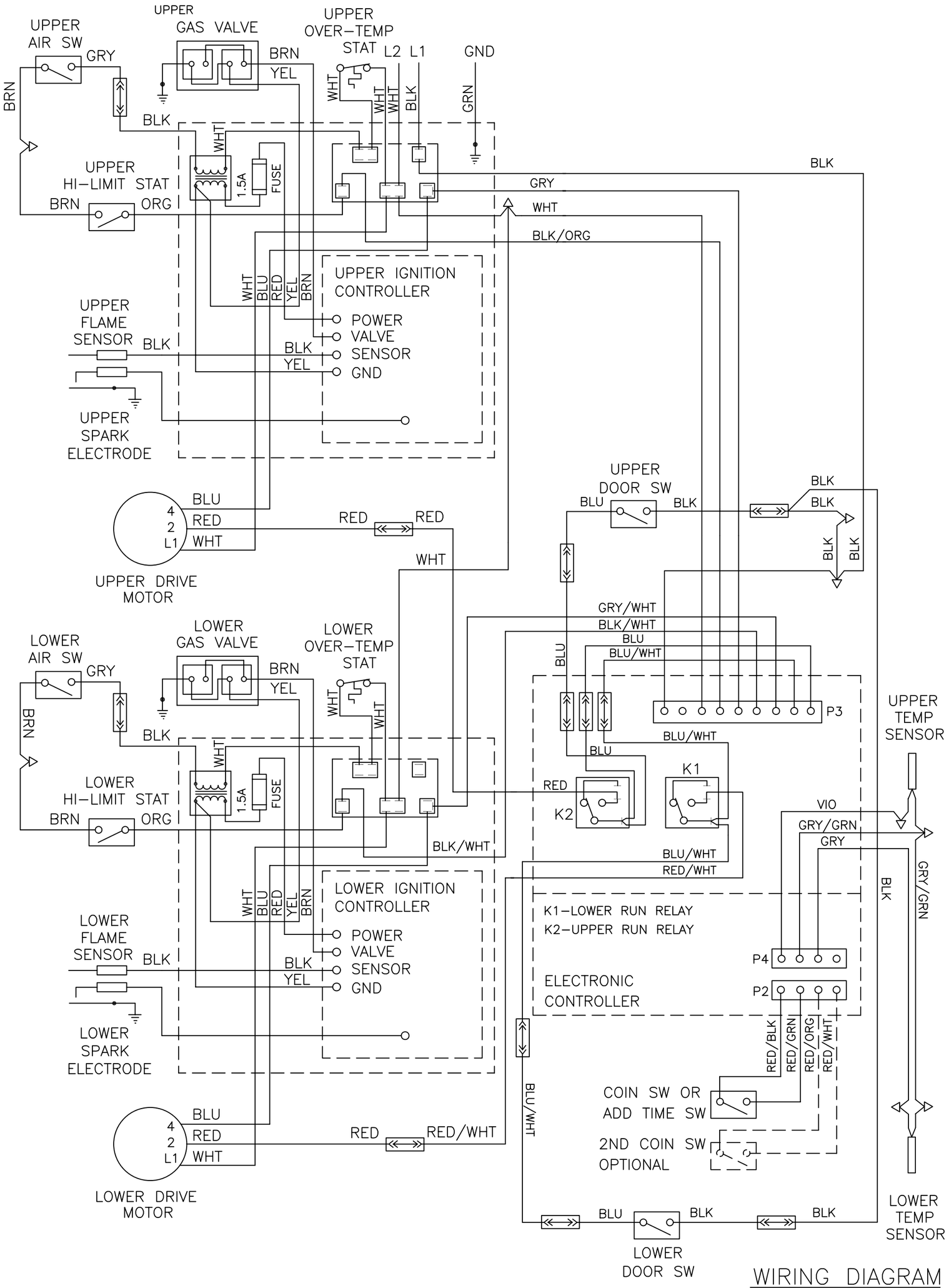

WIRING DIAGRAM
DL2X30
9345-857-001F

IMPORTANT: RETAIN THIS ELECTRICAL DIAGRAM FOR SERVICE.