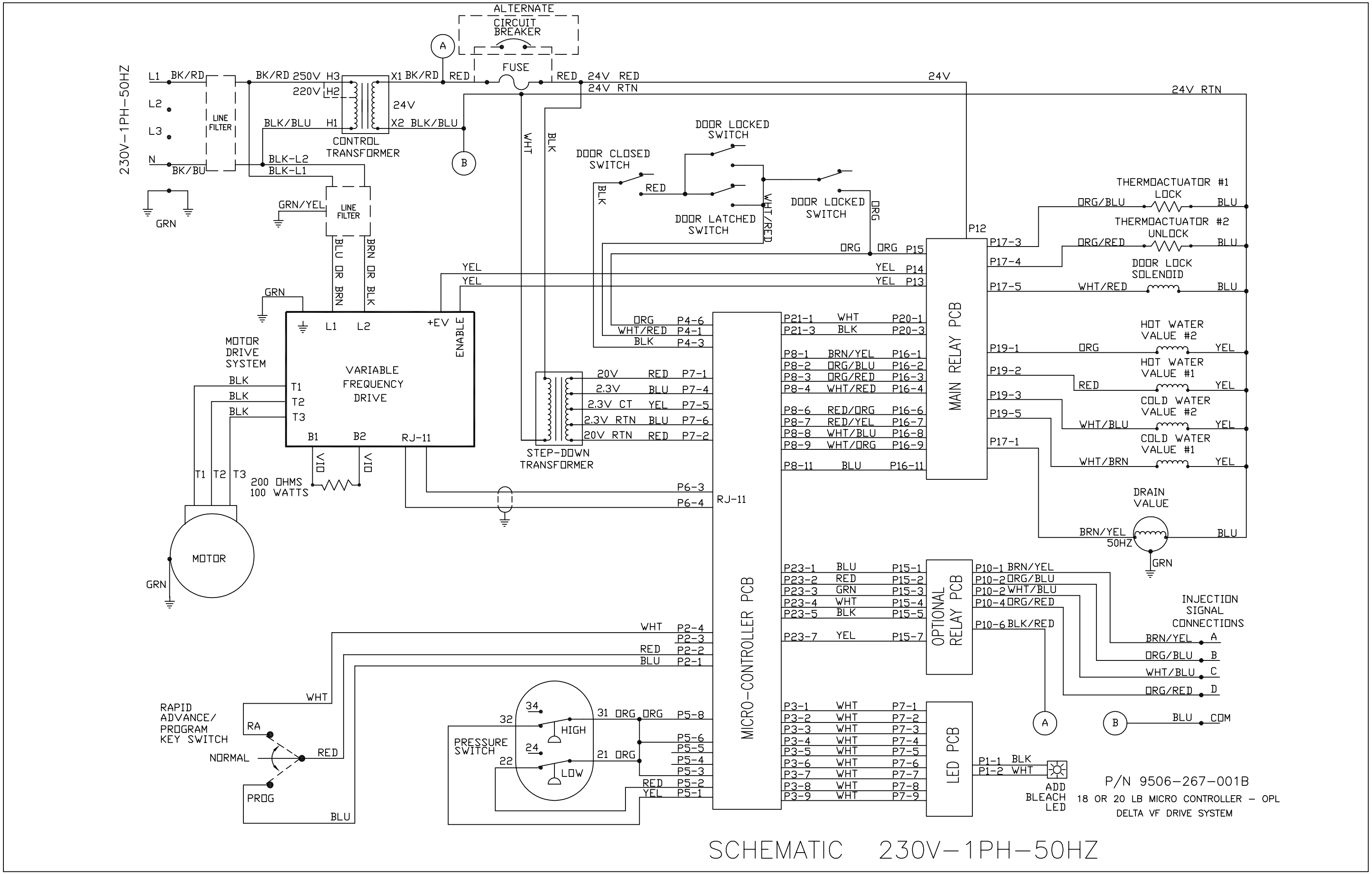
230V-1PH-50HZ
L1
L2
L3
N
BK/RD
BK/BU
LINE FILTER
BK/RD 250V H3
220V H2
BLK/BLU H1
X1 BK/RD
X2 BLK/BLU
24V
CONTROL TRANSFORMER
BLK-L2
BLK-L1
GRN/YEL
GRN
ALTERNATE CIRCUIT BREAKER
FUSE
RED
24V RED
24V RTN
24V
24V RTN
WHT
BLK
DOOR CLOSED SWITCH
DOOR LOCKED SWITCH
DOOR LATCHED SWITCH
WHT/RED
ORG
BLU OR BRN
BRN OR BLK
YEL
MOTOR DRIVE SYSTEM
VARIABLE FREQUENCY DRIVE
L1 L2 +EV ENABLE
T1 T2 T3
B1 B2 RJ-11
VIO
200 OHMS 100 WATTS
MOTOR
STEP-DOWN TRANSFORMER
20V RED P7-1
2.3V BLU P7-4
2.3V CT YEL P7-5
2.3V RTN BLU P7-6
20V RTN RED P7-2
P6-3
P6-4
RJ-11
MICRO-CONTROLLER PCB
ORG P4-6
WHT/RED P4-1
BLK P4-3
P21-1 WHT P20-1
P21-3 BLK P20-3
P8-1 BRN/YEL P16-1
P8-2 ORG/BLU P16-2
P8-3 ORG/RED P16-3
P8-4 WHT/RED P16-4
P8-6 RED/ORG P16-6
P8-7 RED/YEL P16-7
P8-8 WHT/BLU P16-8
P8-9 WHT/ORG P16-9
P8-11 BLU P16-11
MAIN RELAY PCB
P12
ORG ORG P15
YEL P14
YEL P13
P17-3
P17-4
P17-5
P19-1
P19-2
P19-3
P19-5
P17-1
THERMOACTUATOR #1 LOCK
ORG/BLU BLU
THERMOACTUATOR #2 UNLOCK
ORG/RED BLU
DOOR LOCK SOLENOID
WHT/RED BLU
HOT WATER VALUE #2
ORG YEL
HOT WATER VALUE #1
RED YEL
COLD WATER VALUE #2
WHT/BLU YEL
COLD WATER VALUE #1
WHT/BRN YEL
DRAIN VALUE
BRN/YEL BLU
50HZ
GRN
P23-1 BLU P15-1
P23-2 RED P15-2
P23-3 GRN P15-3
P23-4 WHT P15-4
P23-5 BLK P15-5
P23-7 YEL P15-7
OPTIONAL RELAY PCB
P10-1 BRN/YEL
P10-2 ORG/BLU
P10-2 WHT/BLU
P10-4 ORG/RED
P10-6 BLK/RED
INJECTION SIGNAL CONNECTIONS
BRN/YEL A
ORG/BLU B
WHT/BLU C
ORG/RED D
BLU COM
WHT P2-4
P2-3
RED P2-2
BLU P2-1
RAPID ADVANCE/ PROGRAM KEY SWITCH
RA
NORMAL
PROG
PRESSURE SWITCH
32
34
24
22
HIGH
LOW
31 ORG ORG P5-8
P5-6
P5-5
P5-4
P5-3
21 ORG
RED P5-2
YEL P5-1
P3-1 WHT P7-1
P3-2 WHT P7-2
P3-3 WHT P7-3
P3-4 WHT P7-4
P3-5 WHT P7-5
P3-6 WHT P7-6
P3-7 WHT P7-7
P3-8 WHT P7-8
P3-9 WHT P7-9
LED PCB
P1-1 BLK
P1-2 WHT
ADD BLEACH LED
P/N 9506-267-001B
18 OR 20 LB MICRO CONTROLLER - OPL
DELTA VF DRIVE SYSTEM
SCHEMATIC 230V-1PH-50HZ